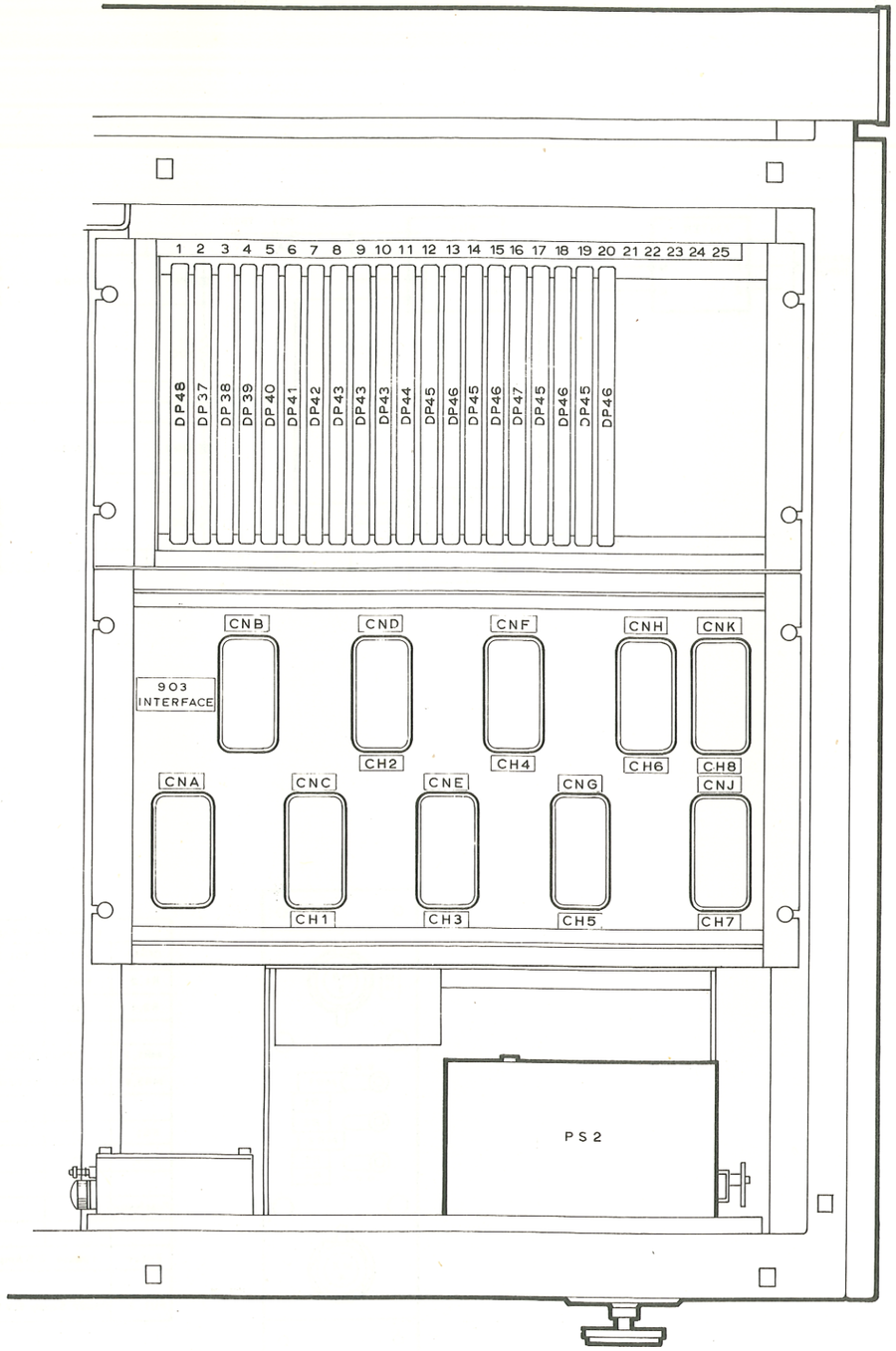


FRONT

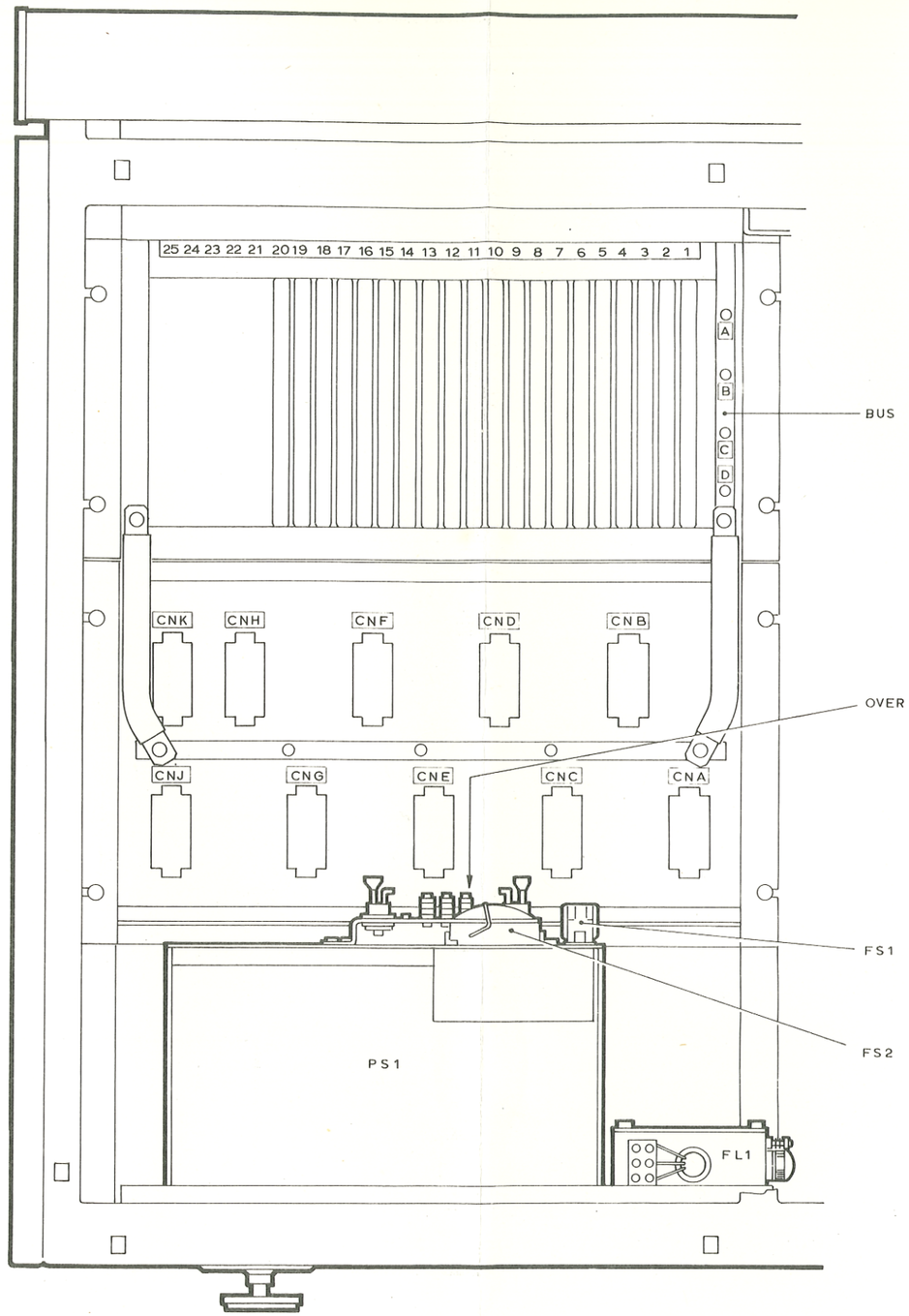


REAR

| CHANNELS | BOARDS |
|---|---|
| 2 | 1 – 13 |
| 4 | 1 – 13,14,15 |
| 6 | 1 – 13,14,15,16,17, 18 |
| 8 | 1 – 13,14,15,16,17, 18, 19, 20 |

ENERAL VIEW

Figure 1 (ISSUE 2)

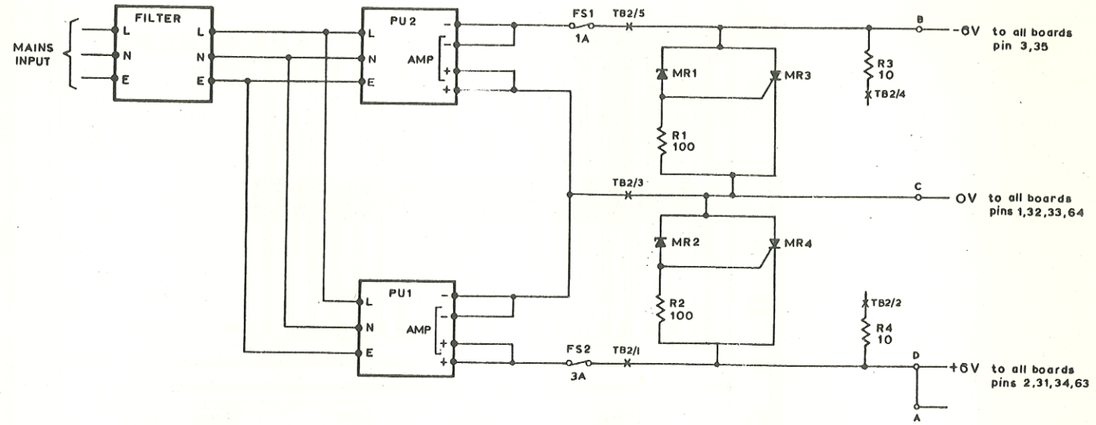


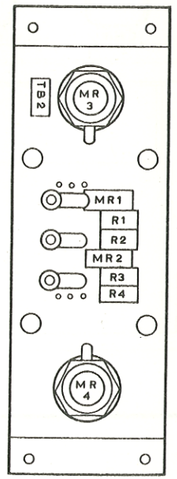


PROTECTION CIRCUIT COMPONENT BOARD

| COMPONENT TABLE | | | |
|---|---|---|---|
| COMP | VALUE | TOL ±% | CAT No. |
| R1,2 | 100 | 5 | 5662 |
| R3,4 | 10 | 5 | 9823 |
| | | | |
| MR1,2 | ZENER DIODE | | 2569 |
| MR3,4 | CONTROL RECTIFIERS | | 11221 |
| | | | |
| FS1 | 1A | | 4267 |
| FS2 | 3A | | 815 |
| | | | |
| Fuseholder | | | 622 |
| | | | |
| Filter | 1 phase 2·5 Amp | | PS 381 |
| | | | |
| PU1,2 | Power Supply ELV 100 | | 11258 |

Figure 2 (ISSUE 2)

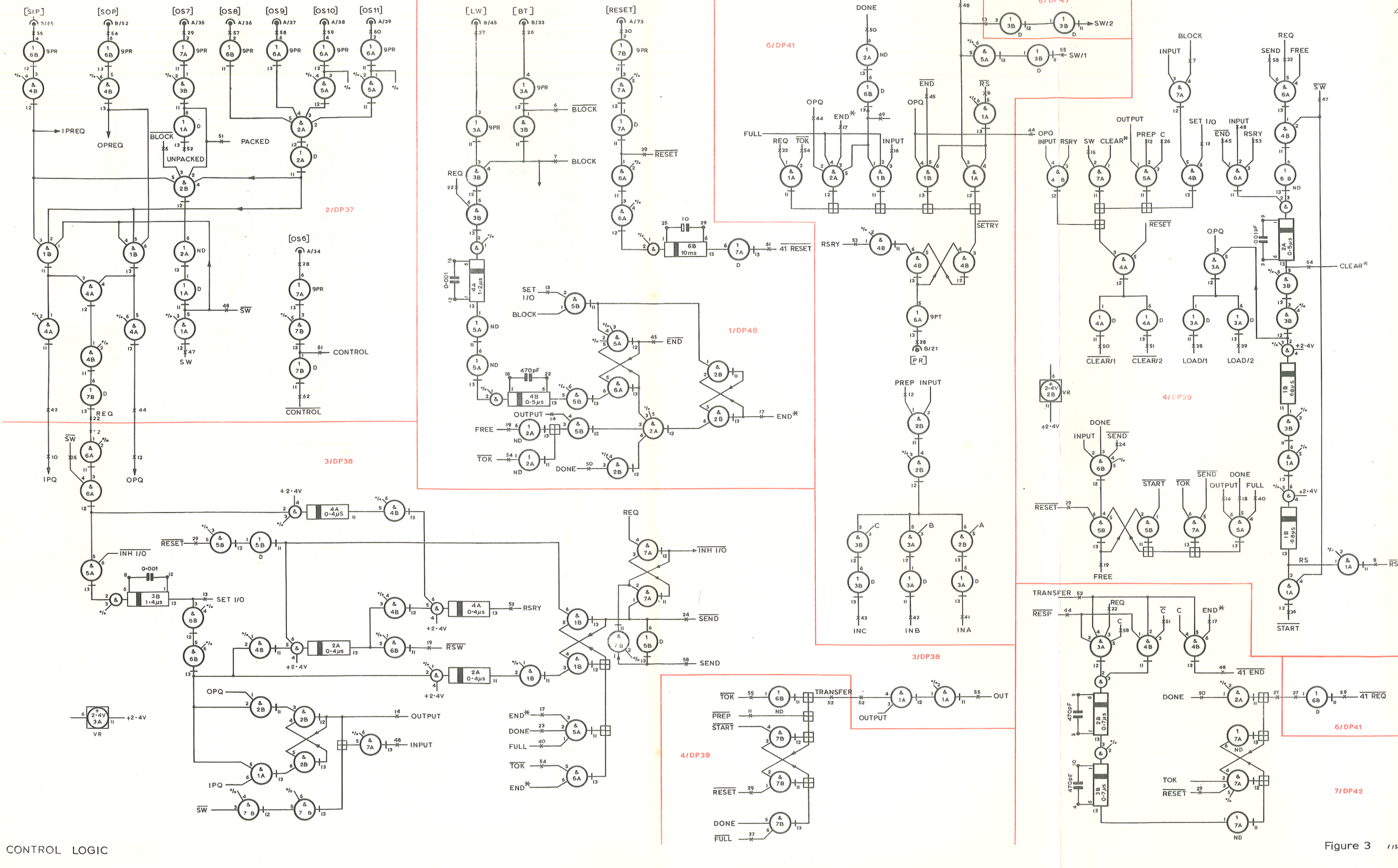


CONTROL LOGIC

Figure 3 (ISSUE 3)

5/D P40

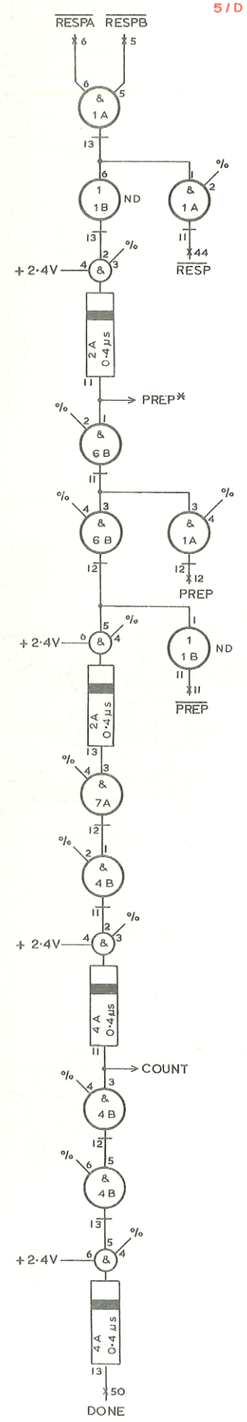


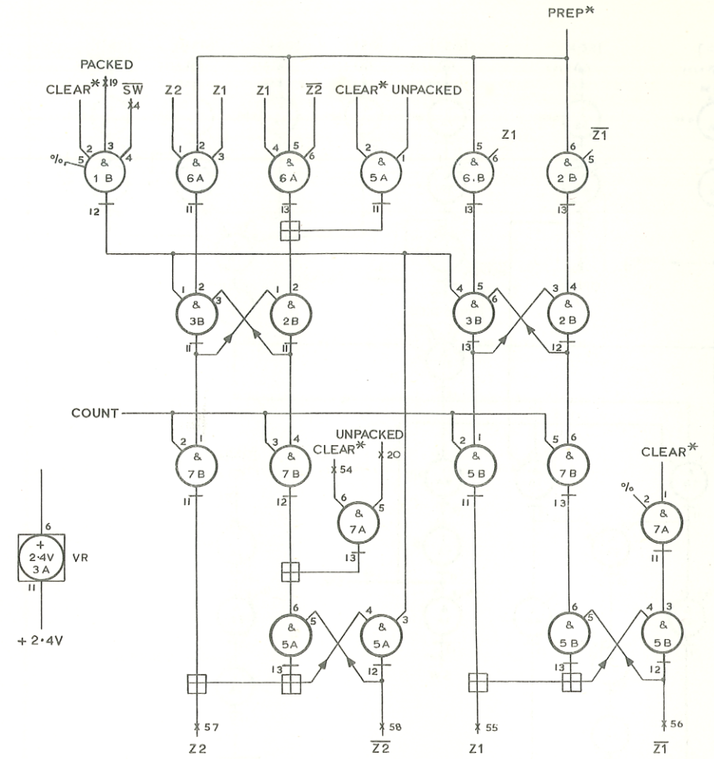


6/DP41

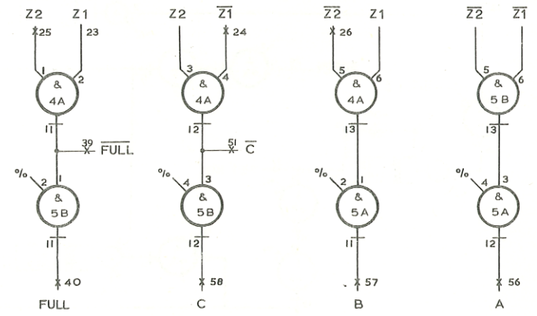


Figure 4 (ISSUE 2)

CONTROL COUNTER

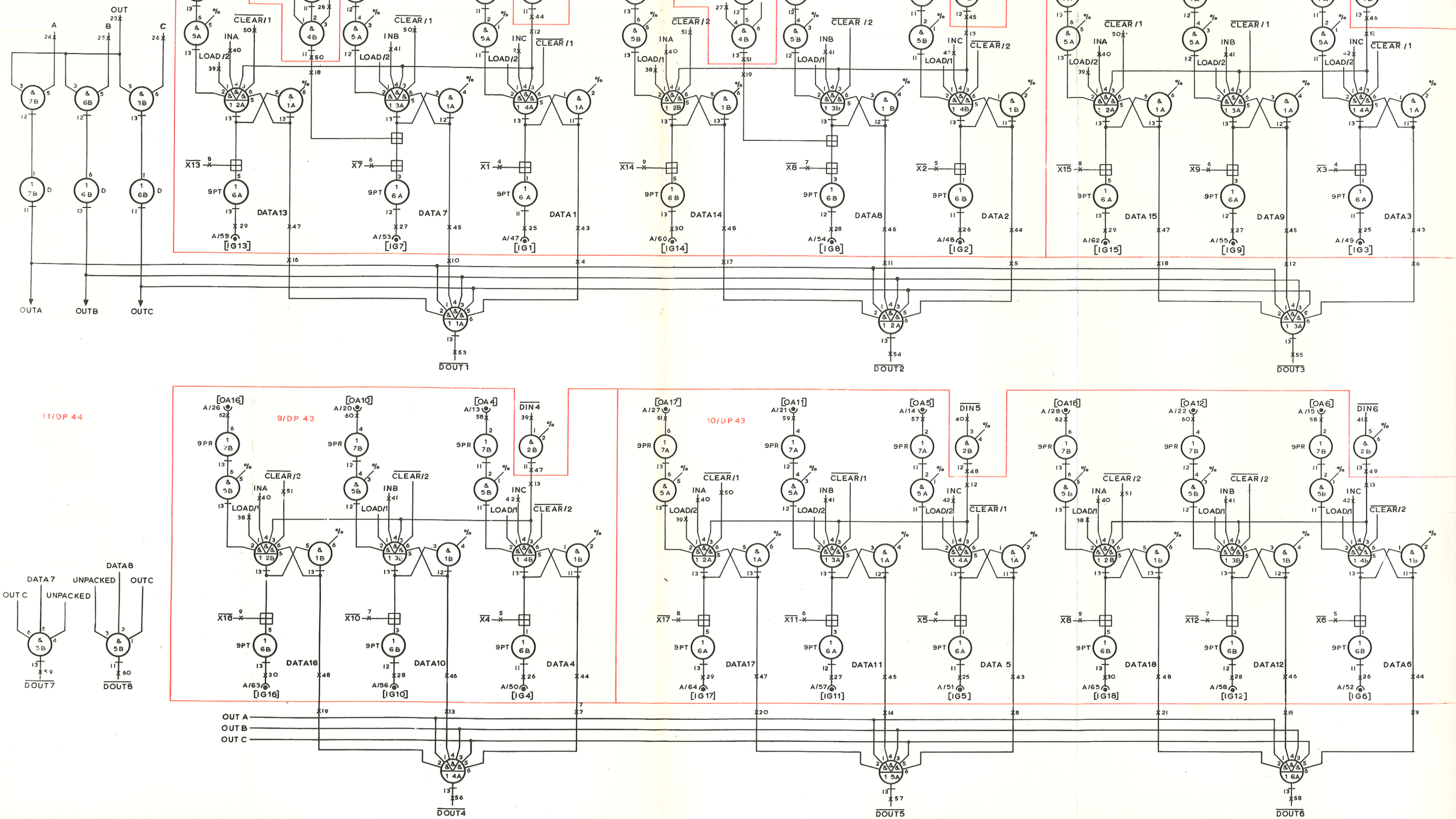


UFFER REGISTER

Figure 5 (ISSUE 2)

(a) SINGLE UNPACKED OUTPUT

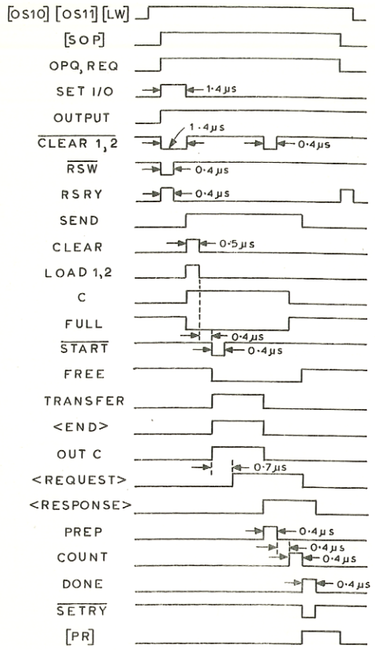


(b) REPETITIVE PACKED OUTPUT

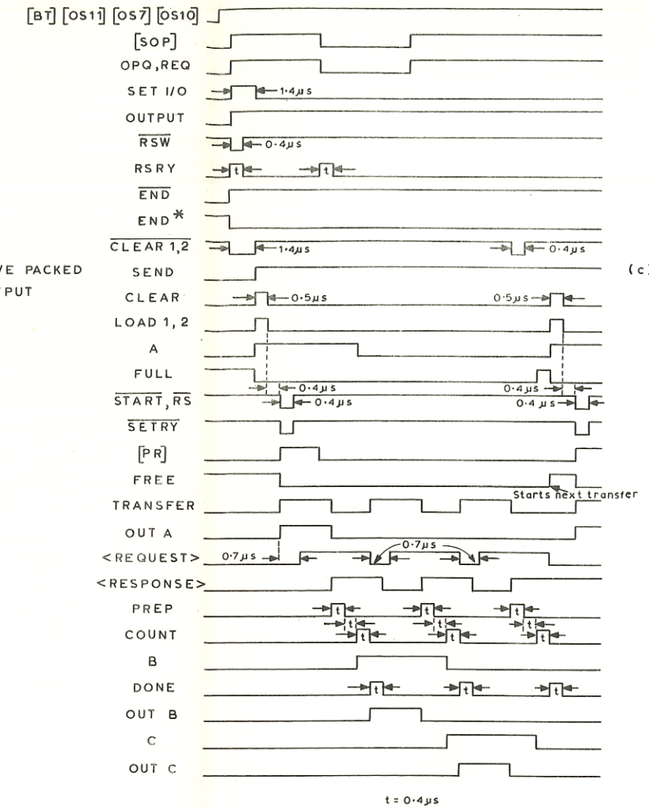


(c) REPETITIVE UNPACKED OUTPUT

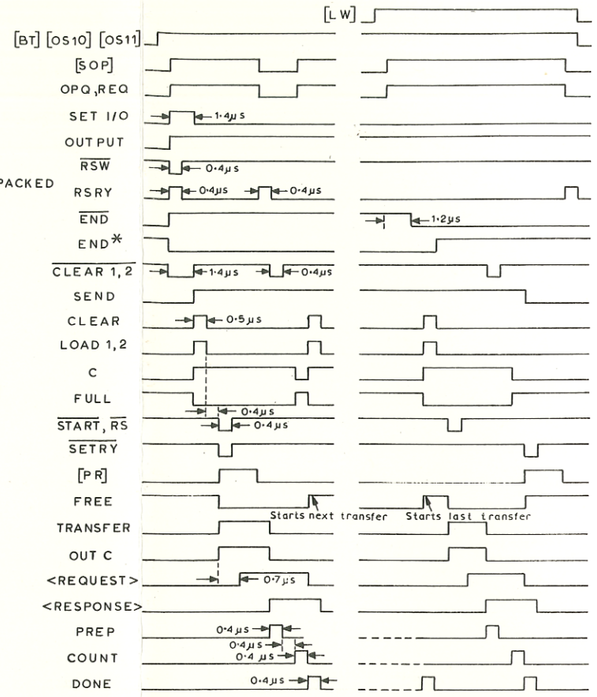


(d) SINGLE UNPACKED INPUT

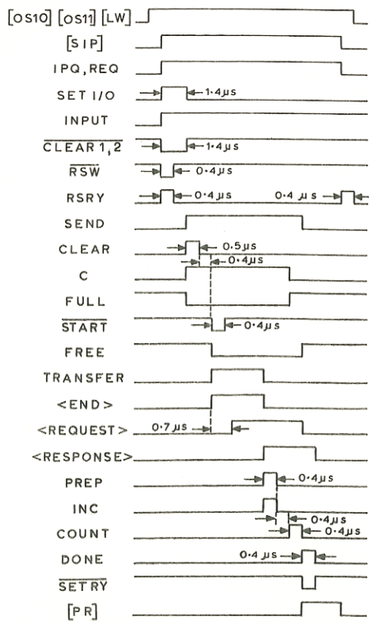


(e) REPETITIVE PACKED INPUT

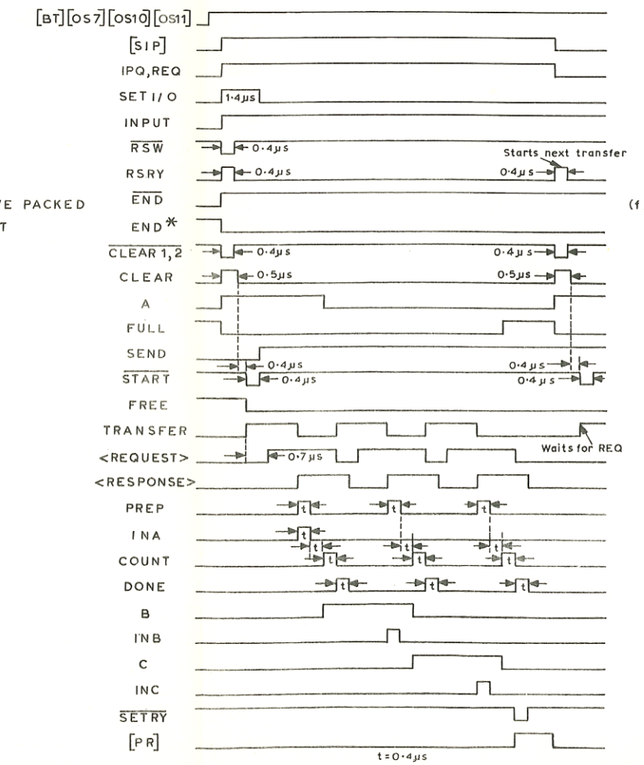


(f) REPETITIVE UNPACKED INPUT

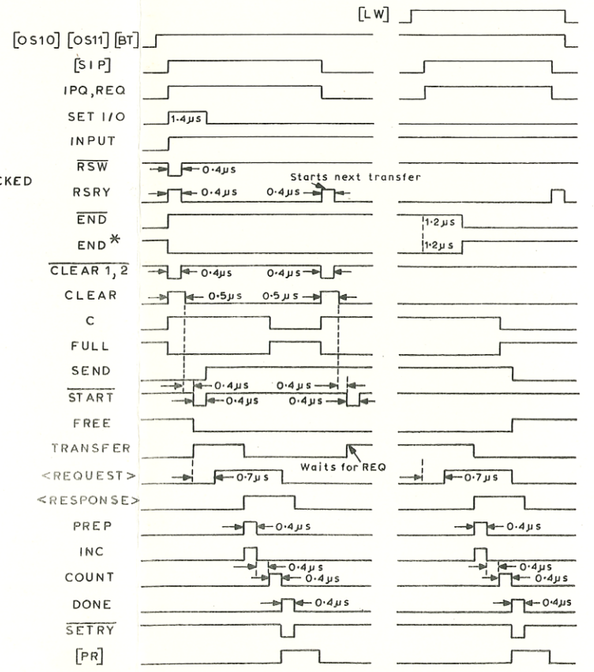

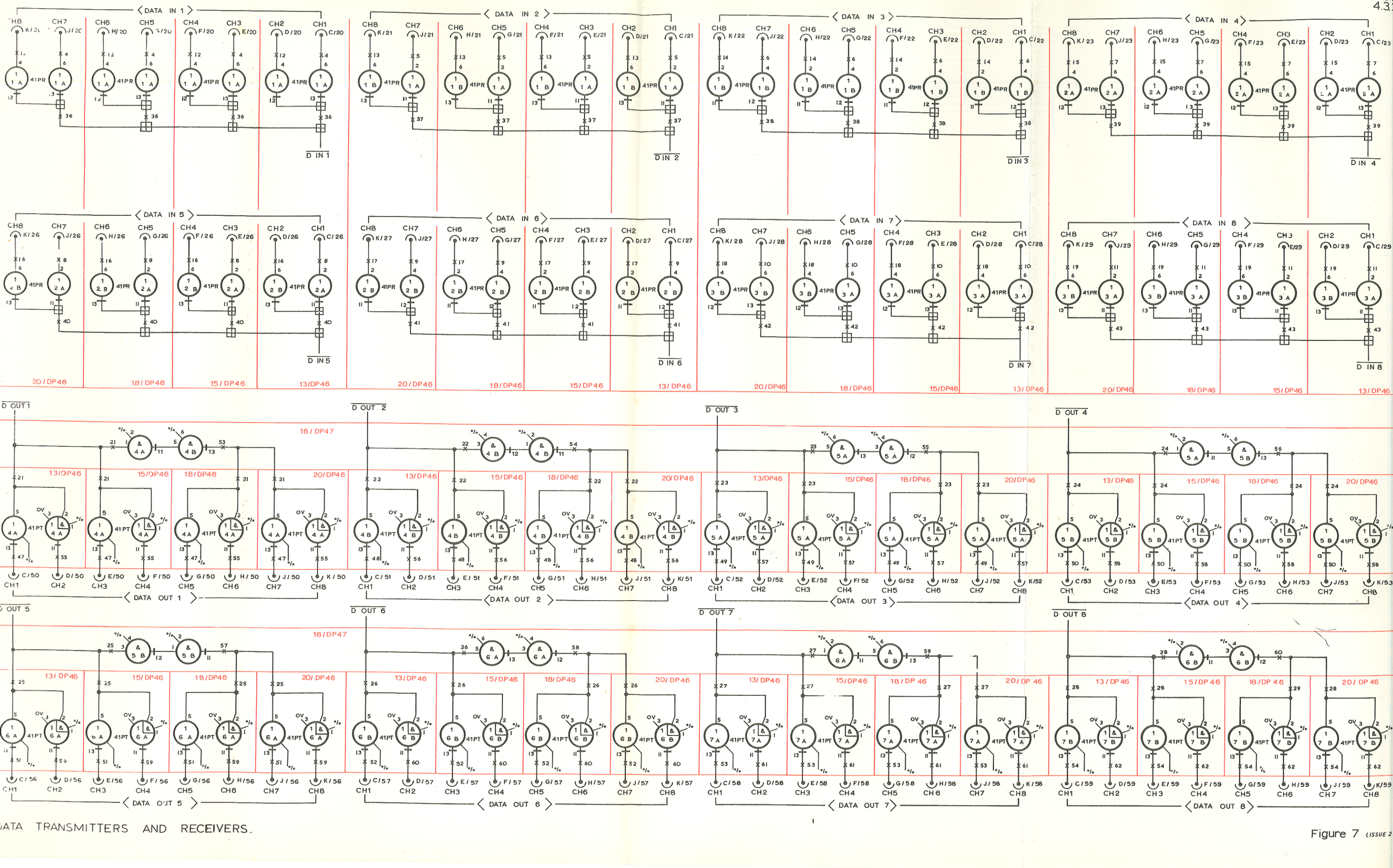


DATA TRANSMITTERS AND RECEIVERS.

Figure 7 (ISSUE 2

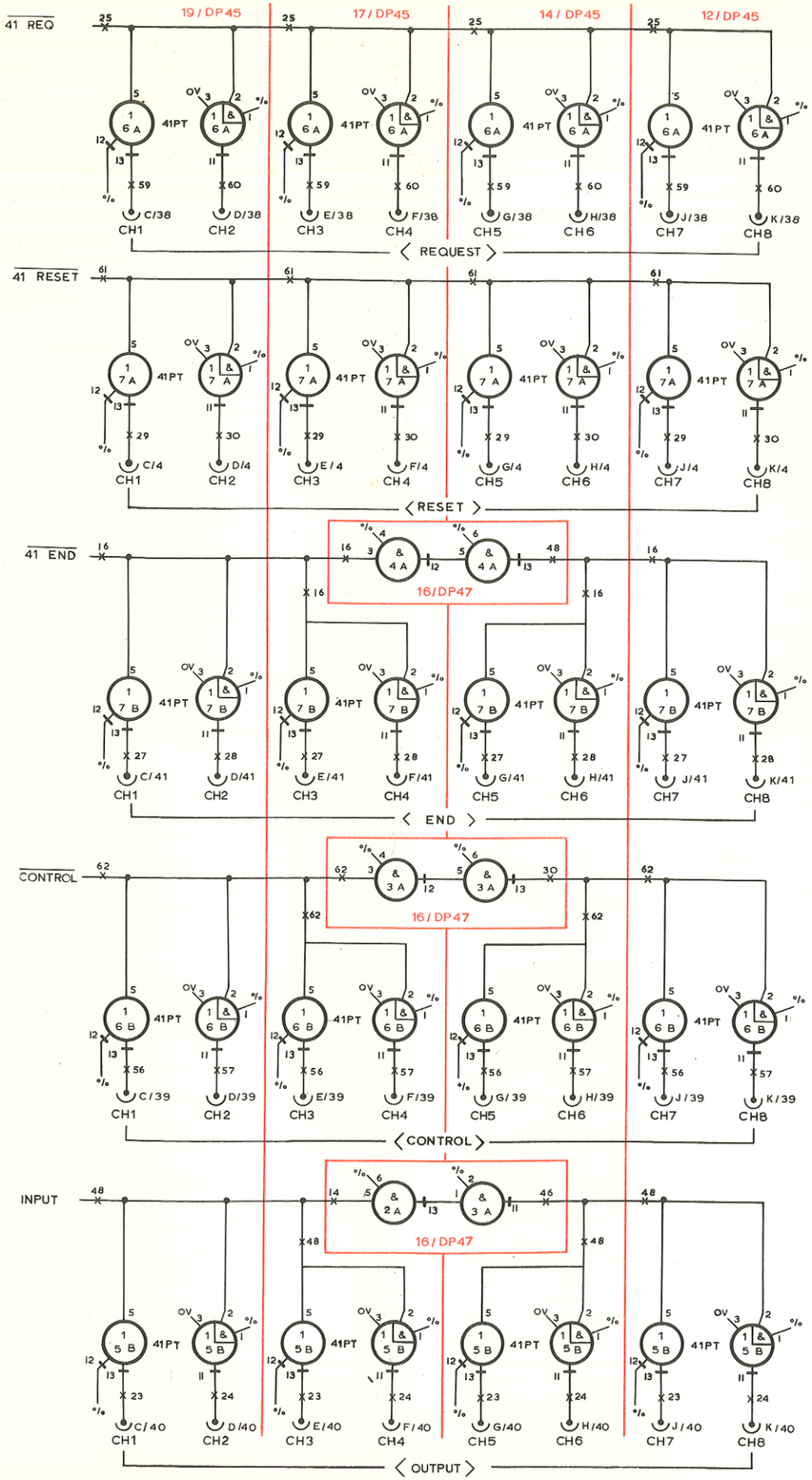


PERIPHERAL SIGNALS & CHANNEL SELECTION

2 / DP 37

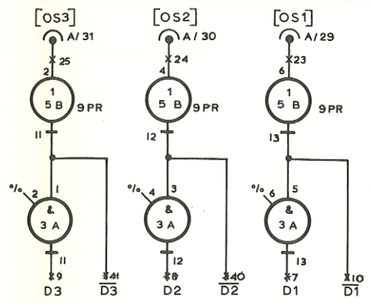


12 / DP45

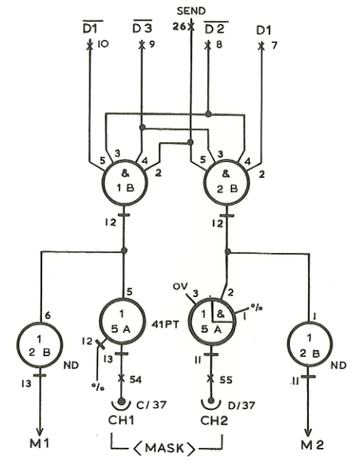


17 / DP45

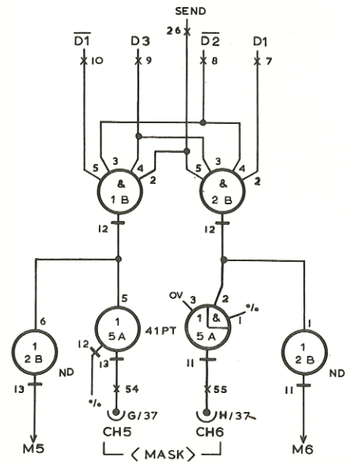


12 / DP45 14 / DP45 17 / DP45 19/DP45

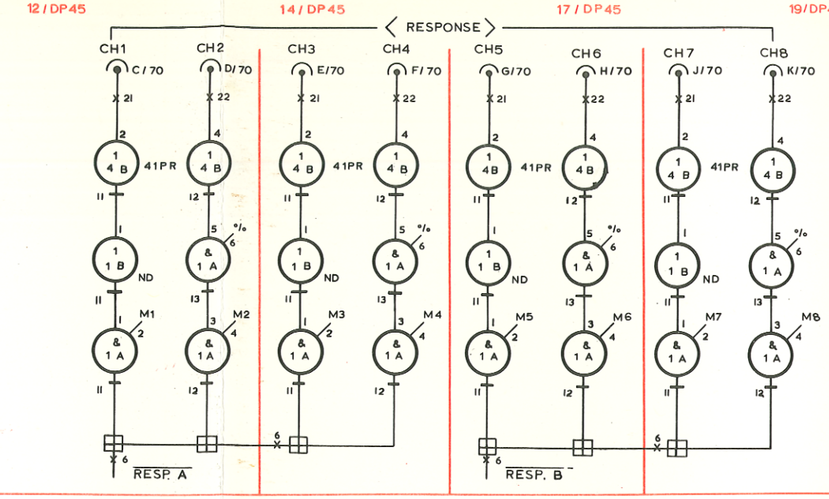


14 / DP45

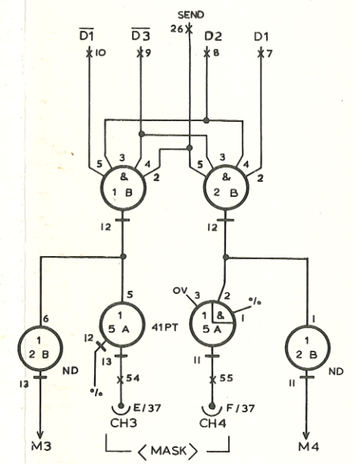


19/DP45

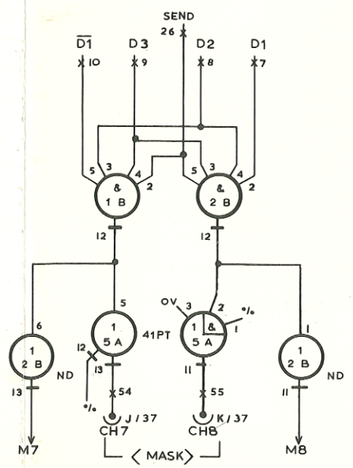


Figure 8 (ISSUE 2)

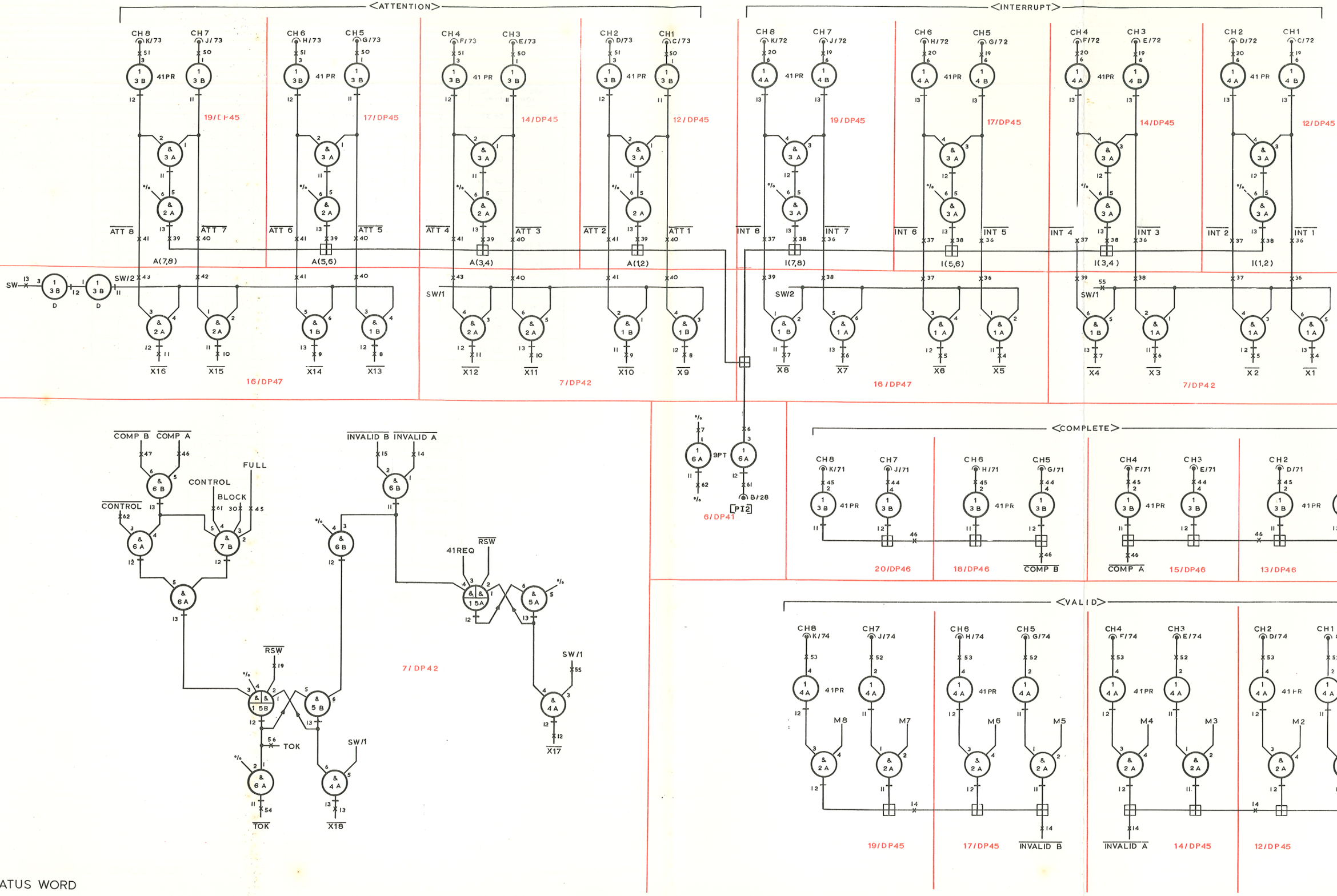


TATUS WORD

Figure 9 (ISSUE 2)

| BOARD POSITION | BOARD TYPE | 1A | 2A | 3A | 4A | 5A | 6A | 7A | 1B | 2B | 3B | 4B | 5B | 6B | 7B |
|---|---|---|---|---|---|---|---|---|---|---|---|---|---|---|---|
| 2 | DP 37 | 15 | 03 | 01 | 01 | 01 | 12 | 12 | 02 | 03 | 01 | 01 | 12 | 12 | 15 |
| 3 | DP 38 | 01 | 40 | 08 | 40 | 02 | 01 | 01 | 01 | 01 | 38 | 01 | 15 | 01 | 01 |
| 4 | DP 39 | 01 | 38 | 15 | 15 | 02 | 02 | 01 | 37 | 08 | 01 | 01 | 02 | 03 | 01 |
| 5 | DP 40 | 01 | 40 | 08 | 40 | 01 | 02 | 01 | 03 | 01 | 02 | 01 | 01 | 01 | 01 |
| 6 | DP 41 | 01 | 03 | 15 | 01 | 01 | 11 | | 02 | 01 | 15 | 01 | 01 | 15 | |
| 7 | DP 42 | 01 | 01 | 03 | 01 | 06 | 01 | 03 | 01 | 38 | 38 | 02 | 06 | 01 | 03 |
| 8, 9, 10 | DP 43 | 01 | 05 | 05 | 05 | 01 | 11 | 12 | 01 | 05 | 05 | 05 | 01 | 11 | 12 |
| 11 | DP 44 | 05 | 05 | 05 | 05 | 05 | 05 | | 01 | 01 | 01 | 02 | 02 | 15 | 15 |
| 12, 14, 17, 19 | DP 45 | 01 | 01 | 01 | 120 | 121 | 121 | 121 | 03 | 03 | 120 | 120 | 121 | 121 | 121 |
| 13, 15, 18, 20 | DP 46 | 120 | 120 | 120 | 121 | 121 | 121 | 121 | 120 | 120 | 120 | 121 | 121 | 121 | 121 |
| 16 | DP 47 | 01 | 01 | 01 | 01 | 01 | 01 | | 01 | | 15 | 01 | 01 | 01 | |
| 1 | DP 48 | | 03 | 12 | 38 | 03 | 01 | 15 | | 01 | 01 | 38 | 01 | 38 | 12 |

| BOARD TYPE | BOARD POSITION | G AREA PAD LOCATION | VALUE | TOL ± % | CAT No. |
|---|---|---|---|---|---|
| DP38 | 3 | 8/12 | 0·001 | 5 | 7917 |
| DP39 | 4 | 3/9 | 470pF | 5 | 7916 |
| DP42 | 7 | 3/9, 4/10 | 470pF | 5 | 7916 |
| DP48 | 1 | 12/16 | 0·001 | 5 | 7917 |
| | | 18/22 | 470pF | 5 | 7916 |
| | | 25/29 | 10 | 20 | 9137 |

NOTES:

1. On all boards decoupling capacitors C1, C2 and C3 are 10μF ± 20%. Catalogue No. 9137.

2. D.C. Supplies to all boards
   +6V pins 2, 31, 34, 63
   −6V pins 3, 35
   0V pins 1, 32, 33, 64